K-Core Technology Co., Ltd.
Product Catalog

NOISE FILTER
/
NANOCRYSTALLINE CORE

(주)케이코어텍
K-Core Technology Co., Ltd.

Model Name Guide

KCT-ⓐⓑⓒ-ⓓⓔ

구 분				
ⓐ : Phase	ⓑ : Voltage	ⓒ : Current	ⓓ : Stage	ⓔ : Type
S : 단상	2 : 250 V 4 : 450 V 5 : 500 V	005 : 5 A 006 : 6 A 010 : 10 A 015 : 15 A 020 : 20 A 030 : 30 A 040 : 40 A 050 : 50 A 060 : 60 A 075 : 75 A 080 : 80 A 100 : 100 A 125 : 125 A 150 : 150 A 200 : 200 A 250 : 250 A 300 : 300 A	1S : 1단 2S : 2단	B : 고감쇄형 P : 초고감쇄형 H : 극고감쇄형

Model Name Guide

KCT-ⓐⓑⓒ-ⓓⓔ

구 분				
ⓐ : Phase	ⓑ : Voltage	ⓒ : Current	ⓓ : Stage	ⓔ : Type
T : 삼상	2 : 250 V 4 : 450 V 5 : 500 V	005 : 5 A 006 : 6 A 010 : 10 A 015 : 15 A 020 : 20 A 030 : 30 A 040 : 40 A 050 : 50 A 060 : 60 A 075 : 75 A 080 : 80 A 100 : 100 A 125 : 125 A 150 : 150 A 200 : 200 A 250 : 250 A 300 : 300 A 350 : 350 A 400 : 400 A 450 : 450 A 500 : 500 A 550 : 550 A 600 : 600 A 650 : 650 A 700 : 700 A	1S : 1단 2S : 2단	B : 고감쇄형 P : 초고감쇄형 H : 극고감쇄형

Product Specifications(H Type 극고감쇄형)

★ 단상 1단 Filter (250V, 450V, 500V)

Model			Current	Size (WxDxH)	Hyperlink
KCT-S2005-1SH	KCT-S4005-1SH	KCT-S5005-1SH	5 A	150x75x50 (mm)	Layout Click
KCT-S2006-1SH	KCT-S4006-1SH	KCT-S5006-1SH	6 A		
KCT-S2010-1SH	KCT-S4010-1SH	KCT-S5010-1SH	10 A		
KCT-S2015-1SH	KCT-S4015-1SH	KCT-S5015-1SH	15 A		
KCT-S2020-1SH	KCT-S4020-1SH	KCT-S5020-1SH	20 A		
KCT-S2030-1SH	KCT-S4030-1SH	KCT-S5030-1SH	30 A		
KCT-S2040-1SH	KCT-S4040-1SH	KCT-S5040-1SH	40 A	165x105x80 (mm)	Layout Click
KCT-S2050-1SH	KCT-S4050-1SH	KCT-S5050-1SH	50 A		
KCT-S2060-1SH	KCT-S4060-1SH	KCT-S5060-1SH	60 A		
KCT-S2075-1SH	KCT-S4075-1SH	KCT-S5075-1SH	75 A		
KCT-S2080-1SH	KCT-S4080-1SH	KCT-S5080-1SH	80 A	190x125x100 (mm)	Layout Click
KCT-S2100-1SH	KCT-S4100-1SH	KCT-S5100-1SH	100 A		
KCT-S2125-1SH	KCT-S4125-1SH	KCT-S5125-1SH	125 A	210x135x100 (mm)	Layout Click
KCT-S2150-1SH	KCT-S4150-1SH	KCT-S5150-1SH	150 A		
KCT-S2200-1SH	KCT-S4200-1SH	KCT-S5200-1SH	200 A	250x155x110 (mm)	Layout Click
KCT-S2250-1SH	KCT-S4250-1SH	KCT-S5250-1SH	250 A		
KCT-S2300-1SH	KCT-S4300-1SH	KCT-S5300-1SH	300 A		

Product Specifications(P Type 초고감쇄형)

★ 단상 1단 Filter (250V, 450V, 500V)

Model			Current	Size (WxDxH)	Hyperlink
KCT-S2005-1SP	KCT-S4005-1SP	KCT-S5005-1SP	5 A	150x75x50 (mm)	Layout Click
KCT-S2006-1SP	KCT-S4006-1SP	KCT-S5006-1SP	6 A		
KCT-S2010-1SP	KCT-S4010-1SP	KCT-S5010-1SP	10 A		
KCT-S2015-1SP	KCT-S4015-1SP	KCT-S5015-1SP	15 A		
KCT-S2020-1SP	KCT-S4020-1SP	KCT-S5020-1SP	20 A		
KCT-S2030-1SP	KCT-S4030-1SP	KCT-S5030-1SP	30 A		
KCT-S2040-1SP	KCT-S4040-1SP	KCT-S5040-1SP	40 A	165x105x80 (mm)	Layout Click
KCT-S2050-1SP	KCT-S4050-1SP	KCT-S5050-1SP	50 A		
KCT-S2060-1SP	KCT-S4060-1SP	KCT-S5060-1SP	60 A		
KCT-S2075-1SP	KCT-S4075-1SP	KCT-S5075-1SP	75 A		
KCT-S2080-1SP	KCT-S4080-1SP	KCT-S5080-1SP	80 A	190x125x100 (mm)	Layout Click
KCT-S2100-1SP	KCT-S4100-1SP	KCT-S5100-1SP	100 A		
KCT-S2125-1SP	KCT-S4125-1SP	KCT-S5125-1SP	125 A	210x135x100 (mm)	Layout Click
KCT-S2150-1SP	KCT-S4150-1SP	KCT-S5150-1SP	150 A		
KCT-S2200-1SP	KCT-S4200-1SP	KCT-S5200-1SP	200 A	250x155x110 (mm)	Layout Click
KCT-S2250-1SP	KCT-S4250-1SP	KCT-S5250-1SP	250 A		
KCT-S2300-1SP	KCT-S4300-1SP	KCT-S5300-1SP	300 A		

Product Specifications(B Type 고감쇄형)

★ 단상 1단 Filter (250V, 450V, 500V)

Model			Current	Size (WxDxH)	Hyperlink
KCT-S2005-1SB	KCT-S4005-1SB	KCT-S5005-1SB	5 A	150x75x50 (mm)	Layout Click
KCT-S2006-1SB	KCT-S4006-1SB	KCT-S5006-1SB	6 A		
KCT-S2010-1SB	KCT-S4010-1SB	KCT-S5010-1SB	10 A		
KCT-S2015-1SB	KCT-S4015-1SB	KCT-S5015-1SB	15 A		
KCT-S2020-1SB	KCT-S4020-1SB	KCT-S5020-1SB	20 A		
KCT-S2030-1SB	KCT-S4030-1SB	KCT-S5030-1SB	30 A		
KCT-S2040-1SB	KCT-S4040-1SB	KCT-S5040-1SB	40 A	165x105x80 (mm)	Layout Click
KCT-S2050-1SB	KCT-S4050-1SB	KCT-S5050-1SB	50 A		
KCT-S2060-1SB	KCT-S4060-1SB	KCT-S5060-1SB	60 A		
KCT-S2075-1SB	KCT-S4075-1SB	KCT-S5075-1SB	75 A		
KCT-S2080-1SB	KCT-S4080-1SB	KCT-S5080-1SB	80 A	190x125x100 (mm)	Layout Click
KCT-S2100-1SB	KCT-S4100-1SB	KCT-S5100-1SB	100 A		
KCT-S2125-1SB	KCT-S4125-1SB	KCT-S5125-1SB	125 A	210x135x100 (mm)	Layout Click
KCT-S2150-1SB	KCT-S4150-1SB	KCT-S5150-1SB	150 A		
KCT-S2200-1SB	KCT-S4200-1SB	KCT-S5200-1SB	200 A	250x155x110 (mm)	Layout Click
KCT-S2250-1SB	KCT-S4250-1SB	KCT-S5250-1SB	250 A		
KCT-S2300-1SB	KCT-S4300-1SB	KCT-S5300-1SB	300 A		

Product Specifications(H Type 극고감쇄형)

★ 단상 2단 Filter (250V, 450V, 500V)

Model			Current	Size (WxDxH)	Hyperlink
KCT-S2005-2SH	KCT-S4005-2SH	KCT-S5005-2SH	5 A	150x75x50 (mm)	Layout Click
KCT-S2006-2SH	KCT-S4006-2SH	KCT-S5006-2SH	6 A		
KCT-S2010-2SH	KCT-S4010-2SH	KCT-S5010-2SH	10 A		
KCT-S2015-2SH	KCT-S4015-2SH	KCT-S5015-2SH	15 A		
KCT-S2020-2SH	-	-	20 A		
KCT-S2030-2SH	-	-	30 A		
-	KCT-S4020-2SH	KCT-S5020-2SH	20 A	200x100x70 (mm)	Layout Click
-	KCT-S4030-2SH	KCT-S5030-2SH	30 A		
KCT-S2040-2SH	KCT-S4040-2SH	KCT-S5040-2SH	40 A	250x105x100 (mm)	Layout Click
KCT-S2050-2SH	KCT-S4050-2SH	KCT-S5050-2SH	50 A		
KCT-S2060-2SH	KCT-S4060-2SH	KCT-S5060-2SH	60 A		
KCT-S2075-2SH	KCT-S4075-2SH	KCT-S5075-2SH	75 A		
KCT-S2080-2SH	KCT-S4080-2SH	KCT-S5080-2SH	80 A	280x125x110 (mm)	Layout Click
KCT-S2100-2SH	KCT-S4100-2SH	KCT-S5100-2SH	100 A		
KCT-S2125-2SH	KCT-S4125-2SH	KCT-S5125-2SH	125 A	320x135x120 (mm)	Layout Click
KCT-S2150-2SH	KCT-S4150-2SH	KCT-S5150-2SH	150 A		
KCT-S2200-2SH	KCT-S4200-2SH	KCT-S5200-2SH	200 A	350x155x130 (mm)	Layout Click
KCT-S2250-2SH	KCT-S4250-2SH	KCT-S5250-2SH	250 A		
KCT-S2300-2SH	KCT-S4300-2SH	KCT-S5300-2SH	300 A		

Product Specifications(P Type 초고감쇄형)

★ 단상 2단 Filter (250V, 450V, 500V)

Model			Current	Size (WxDxH)	Hyperlink
KCT-S2005-2SP	KCT-S4005-2SP	KCT-S5005-2SP	5 A	150x75x50 (mm)	Layout Click
KCT-S2006-2SP	KCT-S4006-2SP	KCT-S5006-2SP	6 A		
KCT-S2010-2SP	KCT-S4010-2SP	KCT-S5010-2SP	10 A		
KCT-S2015-2SP	KCT-S4015-2SP	KCT-S5015-2SP	15 A		
KCT-S2020-2SP	-	-	20 A		
KCT-S2030-2SP	-	-	30 A		
-	KCT-S4020-2SP	KCT-S5020-2SP	20 A	200x100x70 (mm)	Layout Click
-	KCT-S4030-2SP	KCT-S5030-2SP	30 A		
KCT-S2040-2SP	KCT-S4040-2SP	KCT-S5040-2SP	40 A	250x105x100 (mm)	Layout Click
KCT-S2050-2SP	KCT-S4050-2SP	KCT-S5050-2SP	50 A		
KCT-S2060-2SP	KCT-S4060-2SP	KCT-S5060-2SP	60 A		
KCT-S2075-2SP	KCT-S4075-2SP	KCT-S5075-2SP	75 A		
KCT-S2080-2SP	KCT-S4080-2SP	KCT-S5080-2SP	80 A	280x125x110 (mm)	Layout Click
KCT-S2100-2SP	KCT-S4100-2SP	KCT-S5100-2SP	100 A		
KCT-S2125-2SP	KCT-S4125-2SP	KCT-S5125-2SP	125 A	320x135x120 (mm)	Layout Click
KCT-S2150-2SP	KCT-S4150-2SP	KCT-S5150-2SP	150 A		
KCT-S2200-2SP	KCT-S4200-2SP	KCT-S5200-2SP	200 A	350x155x130 (mm)	Layout Click
KCT-S2250-2SP	KCT-S4250-2SP	KCT-S5250-2SP	250 A		
KCT-S2300-2SP	KCT-S4300-2SP	KCT-S5300-2SP	300 A		

Product Specifications(B Type 고감쇄형)

★ 단상 2단 Filter (250V, 450V, 500V)

Model			Current	Size (WxDxH)	Hyperlink
KCT-S2005-2SB	KCT-S4005-2SB	KCT-S5005-2SB	5 A	150x75x50 (mm)	Layout Click
KCT-S2006-2SB	KCT-S4006-2SB	KCT-S5006-2SB	6 A		
KCT-S2010-2SB	KCT-S4010-2SB	KCT-S5010-2SB	10 A		
KCT-S2015-2SB	KCT-S4015-2SB	KCT-S5015-2SB	15 A		
KCT-S2020-2SB	-	-	20 A		
KCT-S2030-2SB	-	-	30 A		
-	KCT-S4030-2SB	KCT-S5030-2SB	30 A	200x100x70 (mm)	Layout Click
-	KCT-S4040-2SB	KCT-S5040-2SB	40 A		
KCT-S2040-2SB	KCT-S4040-2SB	KCT-S5040-2SB	40 A	250x105x100 (mm)	Layout Click
KCT-S2050-2SB	KCT-S4050-2SB	KCT-S5050-2SB	50 A		
KCT-S2060-2SB	KCT-S4060-2SB	KCT-S5060-2SB	60 A		
KCT-S2075-2SB	KCT-S4075-2SB	KCT-S5075-2SB	75 A		
KCT-S2080-2SB	KCT-S4080-2SB	KCT-S5080-2SB	80 A	280x125x110 (mm)	Layout Click
KCT-S2100-2SB	KCT-S4100-2SB	KCT-S5100-2SB	100 A		
KCT-S2125-2SB	KCT-S4125-2SB	KCT-S5125-2SB	125 A	320x135x120 (mm)	Layout Click
KCT-S2150-2SB	KCT-S4150-2SB	KCT-S5150-2SB	150 A		
KCT-S2200-2SB	KCT-S4200-2SB	KCT-S5200-2SB	200 A	350x155x130 (mm)	Layout Click
KCT-S2250-2SB	KCT-S4250-2SB	KCT-S5250-2SB	250 A		
KCT-S2300-2SB	KCT-S4300-2SB	KCT-S5300-2SB	300 A		

Product Specifications

★ **Circuit Diagram [1 Phase, 1 Stage (250, 450, 500 V~)]**

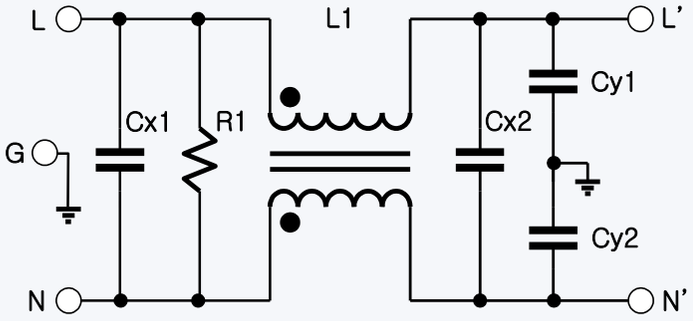

★ **Circuit Diagram [1 Phase, 2 Stage (250, 450, 500 V~)]**

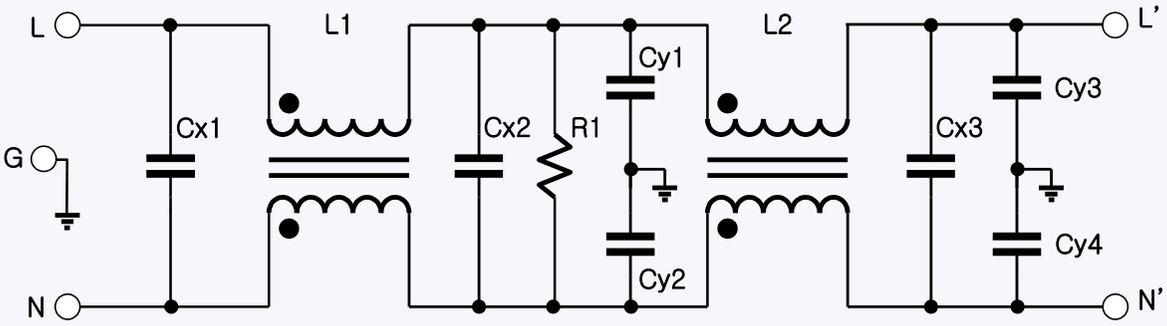

Product Specifications(H Type 극고감쇄형)

★ 삼상 1단 Filter (250V, 450V, 500V)

Model			Current	Size (WxDxH)	Hyperlink
KCT-T2005-1SH	KCT-T4005-1SH	KCT-T5005-1SH	5 A	150x75x50 (mm)	Layout Click
KCT-T2006-1SH	KCT-T4006-1SH	KCT-T5006-1SH	6 A		
KCT-T2010-1SH	KCT-T4010-1SH	KCT-T5010-1SH	10 A		
KCT-T2015-1SH	KCT-T4015-1SH	KCT-T5015-1SH	15 A		
KCT-T2020-1SH	KCT-T4020-1SH	KCT-T5020-1SH	20 A		
KCT-T2030-1SH	KCT-T4030-1SH	KCT-T5030-1SH	30 A		
KCT-T2040-1SH	KCT-T4040-1SH	KCT-T5040-1SH	40 A	165x105x80 (mm)	Layout Click
KCT-T2050-1SH	KCT-T4050-1SH	KCT-T5050-1SH	50 A		
KCT-T2060-1SH	KCT-T4060-1SH	KCT-T5060-1SH	60 A		
KCT-T2075-1SH	KCT-T4075-1SH	KCT-T5075-1SH	75 A		
KCT-T2080-1SH	KCT-T4080-1SH	KCT-T5080-1SH	80 A	190x125x100 (mm)	Layout Click
KCT-T2100-1SH	KCT-T4100-1SH	KCT-T5100-1SH	100 A		
KCT-T2125-1SH	KCT-T4125-1SH	KCT-T5125-1SH	125 A	210x135x100 (mm)	Layout Click
KCT-T2150-1SH	KCT-T4150-1SH	KCT-T5150-1SH	150 A		
KCT-T2200-1SH	KCT-T4200-1SH	KCT-T5200-1SH	200 A	250x155x110 (mm)	Layout Click
KCT-T2250-1SH	KCT-T4250-1SH	KCT-T5250-1SH	250 A		
KCT-T2300-1SH	KCT-T4300-1SH	KCT-T5300-1SH	300 A		
KCT-T2350-1SH	KCT-T4350-1SH	KCT-T5350-1SH	350 A	420x210x210 (mm)	Layout Click
KCT-T2400-1SH	KCT-T4400-1SH	KCT-T5400-1SH	400 A		
KCT-T2450-1SH	KCT-T4450-1SH	KCT-T5450-1SH	450 A		
KCT-T2500-1SH	KCT-T4500-1SH	KCT-T5500-1SH	500 A	500x240x210 (mm)	Layout Click
KCT-T2550-1SH	KCT-T4550-1SH	KCT-T5550-1SH	550 A		
KCT-T2600-1SH	KCT-T4600-1SH	KCT-T5600-1SH	600 A		
KCT-T2650-1SH	KCT-T4650-1SH	KCT-T5650-1SH	650 A		
KCT-T2700-1SH	KCT-T4700-1SH	KCT-T5700-1SH	700 A		

Product Specifications(P Type 초고감쇄형)

★ 삼상 1단 Filter (250V, 450V, 500V)

Model			Current	Size (WxDxH)	Hyperlink
KCT-T2005-1SP	KCT-T4005-1SP	KCT-T5005-1SP	5 A	150x75x50 (mm)	Layout Click
KCT-T2006-1SP	KCT-T4006-1SP	KCT-T5006-1SP	6 A		
KCT-T2010-1SP	KCT-T4010-1SP	KCT-T5010-1SP	10 A		
KCT-T2015-1SP	KCT-T4015-1SP	KCT-T5015-1SP	15 A		
KCT-T2020-1SP	KCT-T4020-1SP	KCT-T5020-1SP	20 A		
KCT-T2030-1SP	KCT-T4030-1SP	KCT-T5030-1SP	30 A		
KCT-T2040-1SP	KCT-T4040-1SP	KCT-T5040-1SP	40 A	165x105x80 (mm)	Layout Click
KCT-T2050-1SP	KCT-T4050-1SP	KCT-T5050-1SP	50 A		
KCT-T2060-1SP	KCT-T4060-1SP	KCT-T5060-1SP	60 A		
KCT-T2075-1SP	KCT-T4075-1SP	KCT-T5075-1SP	75 A		
KCT-T2080-1SP	KCT-T4080-1SP	KCT-T5080-1SP	80 A	190x125x100 (mm)	Layout Click
KCT-T2100-1SP	KCT-T4100-1SP	KCT-T5100-1SP	100 A		
KCT-T2125-1SP	KCT-T4125-1SP	KCT-T5125-1SP	125 A	210x135x100 (mm)	Layout Click
KCT-T2150-1SP	KCT-T4150-1SP	KCT-T5150-1SP	150 A		
KCT-T2200-1SP	KCT-T4200-1SP	KCT-T5200-1SP	200 A	250x155x110 (mm)	Layout Click
KCT-T2250-1SP	KCT-T4250-1SP	KCT-T5250-1SP	250 A		
KCT-T2300-1SP	KCT-T4300-1SP	KCT-T5300-1SP	300 A		
KCT-T2350-1SP	KCT-T4350-1SP	KCT-T5350-1SP	350 A	420x210x210 (mm)	Layout Click
KCT-T2400-1SP	KCT-T4400-1SP	KCT-T5400-1SP	400 A		
KCT-T2450-1SP	KCT-T4450-1SP	KCT-T5450-1SP	450 A		
KCT-T2500-1SP	KCT-T4500-1SP	KCT-T5500-1SP	500 A	500x240x210 (mm)	Layout Click
KCT-T2550-1SP	KCT-T4550-1SP	KCT-T5550-1SP	550 A		
KCT-T2600-1SP	KCT-T4600-1SP	KCT-T5600-1SP	600 A		
KCT-T2650-1SP	KCT-T4650-1SP	KCT-T5650-1SP	650 A		
KCT-T2700-1SP	KCT-T4700-1SP	KCT-T5700-1SP	700 A		

Product Specifications(B Type 고감쇄형)

★ 삼상 1단 Filter (250V, 450V, 500V)

Model			Current	Size (WxDxH)	Hyperlink
KCT-T2005-1SB	KCT-T4005-1SB	KCT-T5005-1SB	5 A	150x75x50 (mm)	Layout Click
KCT-T2006-1SB	KCT-T4006-1SB	KCT-T5006-1SB	6 A		
KCT-T2010-1SB	KCT-T4100-1SB	KCT-T5010-1SB	10 A		
KCT-T2015-1SB	KCT-T4015-1SB	KCT-T5015-1SB	15 A		
KCT-T2020-1SB	KCT-T4020-1SB	KCT-T5020-1SB	20 A		
KCT-T2030-1SB	KCT-T4030-1SB	KCT-T5030-1SB	30 A		
KCT-T2040-1SB	KCT-T4040-1SB	KCT-T5040-1SB	40 A	165x105x80 (mm)	Layout Click
KCT-T2050-1SB	KCT-T4050-1SB	KCT-T5050-1SB	50 A		
KCT-T2060-1SB	KCT-T4060-1SB	KCT-T5060-1SB	60 A		
KCT-T2075-1SB	KCT-T4075-1SB	KCT-T5075-1SB	75 A		
KCT-T2080-1SB	KCT-T4080-1SB	KCT-T5080-1SB	80 A	190x125x100 (mm)	Layout Click
KCT-T2100-1SB	KCT-T4100-1SB	KCT-T5100-1SB	100 A		
KCT-T2125-1SB	KCT-T4125-1SB	KCT-T5125-1SB	125 A	210x135x100 (mm)	Layout Click
KCT-T2150-1SB	KCT-T4150-1SB	KCT-T5150-1SB	150 A		
KCT-T2200-1SB	KCT-T4200-1SB	KCT-T5200-1SB	200 A	250x155x110 (mm)	Layout Click
KCT-T2250-1SB	KCT-T4250-1SB	KCT-T5250-1SB	250 A		
KCT-T2300-1SB	KCT-T4300-1SB	KCT-T5300-1SB	300 A		
KCT-T2350-1SB	KCT-T4350-1SB	KCT-T5350-1SB	350 A	420x210x210 (mm)	Layout Click
KCT-T2400-1SB	KCT-T4400-1SB	KCT-T5400-1SB	400 A		
KCT-T2450-1SB	KCT-T4450-1SB	KCT-T5450-1SB	450 A		
KCT-T2500-1SB	KCT-T4500-1SB	KCT-T5500-1SB	500 A	500x240x210 (mm)	Layout Click
KCT-T2550-1SB	KCT-T4550-1SB	KCT-T5550-1SB	550 A		
KCT-T2600-1SB	KCT-T4600-1SB	KCT-T5600-1SB	600 A		
KCT-T2650-1SB	KCT-T4650-1SB	KCT-T5650-1SB	650 A		
KCT-T2700-1SB	KCT-T4700-1SB	KCT-T5700-1SB	700 A		

Product Specifications(H Type 극고감쇄형)

★ 삼상 2단 Filter (250V, 450V, 500V)

Model			Current	Size (WxDxH)	Hyperlink
KCT-T2005-2SH	KCT-T4005-2SH	KCT-T5005-2SH	5 A	200x100x70 (mm)	Layout Click
KCT-T2006-2SH	KCT-T4006-2SH	KCT-T5006-2SH	6 A		
KCT-T2010-2SH	KCT-T4010-2SH	KCT-T5010-2SH	10 A		
KCT-T2015-2SH	KCT-T4015-2SH	KCT-T5015-2SH	15 A		
KCT-T2020-2SH	KCT-T4020-2SH	KCT-T5020-2SH	20 A		
KCT-T2030-2SH	KCT-T4030-2SH	KCT-T5030-2SH	30 A	250x105x100 (mm)	Layout Click
KCT-T2040-2SH	KCT-T4040-2SH	KCT-T5040-2SH	40 A		
KCT-T2050-2SH	KCT-T4050-2SH	KCT-T5050-2SH	50 A		
KCT-T2060-2SH	KCT-T4060-2SH	KCT-T5060-2SH	60 A		
KCT-T2075-2SH	KCT-T4075-2SH	KCT-T5075-2SH	75 A		
KCT-T2080-2SH	KCT-T4080-2SH	KCT-T5080-2SH	80 A	280x125x110 (mm)	Layout Click
KCT-T2100-2SH	KCT-T4100-2SH	KCT-T5100-2SH	100 A		
KCT-T2125-2SH	KCT-T4125-2SH	KCT-T5125-2SH	125 A	320x135x120 (mm)	Layout Click
KCT-T2150-2SH	KCT-T4150-2SH	KCT-T5150-2SH	150 A		
KCT-T2200-2SH	KCT-T4200-2SH	KCT-T5200-2SH	200 A	350x155x130 (mm)	Layout Click
KCT-T2250-2SH	KCT-T4250-2SH	KCT-T5250-2SH	250 A		
KCT-T2300-2SH	KCT-T4300-2SH	KCT-T5300-2SH	300 A		
KCT-T2350-2SH	KCT-T4350-2SH	KCT-T5350-2SH	350 A	420x210x210 (mm)	Layout Click
KCT-T2400-2SH	KCT-T4400-2SH	KCT-T5400-2SH	400 A		
KCT-T2450-2SH	KCT-T4450-2SH	KCT-T5450-2SH	450 A		
KCT-T2500-2SH	KCT-T4500-2SH	KCT-T5500-2SH	500 A	500x240x210 (mm)	Layout Click
KCT-T2550-2SH	KCT-T4550-2SH	KCT-T5550-2SH	550 A		
KCT-T2600-2SH	KCT-T4600-2SH	KCT-T5600-2SH	600 A		
KCT-T2650-2SH	KCT-T4650-2SH	KCT-T5650-2SH	650 A		
KCT-T2700-2SH	KCT-T4700-2SH	KCT-T5700-2SH	700 A		

Product Specifications(P Type 초고감쇄형)

★ 삼상 2단 Filter (250V, 450V, 500V)

Model			Current	Size (WxDxH)	Hyperlink
KCT-T2005-2SP	KCT-T4005-2SP	KCT-T5005-2SP	5 A	200x100x70 (mm)	Layout Click
KCT-T2006-2SP	KCT-T4006-2SP	KCT-T5006-2SP	6 A		
KCT-T2010-2SP	KCT-T4010-2SP	KCT-T5010-2SP	10 A		
KCT-T2015-2SP	KCT-T4015-2SP	KCT-T5015-2SP	15 A		
KCT-T2020-2SP	KCT-T4020-2SP	KCT-T5020-2SP	20 A		
KCT-T2030-2SP	KCT-T4030-2SP	KCT-T5030-2SP	30 A	250x105x100 (mm)	Layout Click
KCT-T2040-2SP	KCT-T4040-2SP	KCT-T5040-2SP	40 A		
KCT-T2050-2SP	KCT-T4050-2SP	KCT-T5050-2SP	50 A		
KCT-T2060-2SP	KCT-T4060-2SP	KCT-T5060-2SP	60 A		
KCT-T2075-2SP	KCT-T4075-2SP	KCT-T5075-2SP	75 A		
KCT-T2080-2SP	KCT-T4080-2SP	KCT-T5080-2SP	80 A	280x125x110 (mm)	Layout Click
KCT-T2100-2SP	KCT-T4100-2SP	KCT-T5100-2SP	100 A		
KCT-T2125-2SP	KCT-T4125-2SP	KCT-T5125-2SP	125 A	320x135x120 (mm)	Layout Click
KCT-T2150-2SP	KCT-T4150-2SP	KCT-T5150-2SP	150 A		
KCT-T2200-2SP	KCT-T4200-2SP	KCT-T5200-2SP	200 A	350x155x130 (mm)	Layout Click
KCT-T2250-2SP	KCT-T4250-2SP	KCT-T5250-2SP	250 A		
KCT-T2300-2SP	KCT-T4300-2SP	KCT-T5300-2SP	300 A		
KCT-T2350-2SP	KCT-T4350-2SP	KCT-T5350-2SP	350 A	420x210x210 (mm)	Layout Click
KCT-T2400-2SP	KCT-T4400-2SP	KCT-T5400-2SP	400 A		
KCT-T2450-2SP	KCT-T4450-2SP	KCT-T5450-2SP	450 A		
KCT-T2500-2SP	KCT-T4500-2SP	KCT-T5500-2SP	500 A	500x240x210 (mm)	Layout Click
KCT-T2550-2SP	KCT-T4550-2SP	KCT-T5550-2SP	550 A		
KCT-T2600-2SP	KCT-T4600-2SP	KCT-T5600-2SP	600 A		
KCT-T2650-2SP	KCT-T4650-2SP	KCT-T5650-2SP	650 A		
KCT-T2700-2SP	KCT-T4700-2SP	KCT-T5700-2SP	700 A		

Product Specifications(B Type 고감쇄형)

★ 삼상 2단 Filter (250V, 450V, 500V)

Model			Current	Size (WxDxH)	Hyperlink
KCT-T2005-2SB	KCT-T4005-2SB	KCT-T5005-2SB	5 A	200x100x70 (mm)	Layout Click
KCT-T2006-2SB	KCT-T4006-2SB	KCT-T5006-2SB	6 A		
KCT-T2010-2SB	KCT-T4010-2SB	KCT-T5010-2SB	10 A		
KCT-T2015-2SB	KCT-T4015-2SB	KCT-T5015-2SB	15 A		
KCT-T2020-2SB	KCT-T4020-2SB	KCT-T5020-2SB	20 A		
KCT-T2030-2SB	KCT-T4030-2SB	KCT-T5030-2SB	30 A	250x105x100 (mm)	Layout Click
KCT-T2040-2SB	KCT-T4040-2SB	KCT-T5040-2SB	40 A		
KCT-T2050-2SB	KCT-T4050-2SB	KCT-T5050-2SB	50 A		
KCT-T2060-2SB	KCT-T4060-2SB	KCT-T5060-2SB	60 A		
KCT-T2075-2SB	KCT-T4075-2SB	KCT-T5075-2SB	75 A		
KCT-T2080-2SB	KCT-T4080-2SB	KCT-T5080-2SB	80 A	280x125x110 (mm)	Layout Click
KCT-T2100-2SB	KCT-T4100-2SB	KCT-T5100-2SB	100 A		
KCT-T2125-2SB	KCT-T4125-2SB	KCT-T5125-2SB	125 A	320x135x120 (mm)	Layout Click
KCT-T2150-2SB	KCT-T4150-2SB	KCT-T5150-2SB	150 A		
KCT-T2200-2SB	KCT-T4200-2SB	KCT-T5200-2SB	200 A	350x155x130 (mm)	Layout Click
KCT-T2250-2SB	KCT-T4250-2SB	KCT-T5250-2SB	250 A		
KCT-T2300-2SB	KCT-T4300-2SB	KCT-T5300-2SB	300 A		
KCT-T2350-2SB	KCT-T4350-2SB	KCT-T5350-2SB	350 A	420x210x210 (mm)	Layout Click
KCT-T2400-2SB	KCT-T4400-2SB	KCT-T5400-2SB	400 A		
KCT-T2450-2SB	KCT-T4450-2SB	KCT-T5450-2SB	450 A		
KCT-T2500-2SB	KCT-T4500-2SB	KCT-T5500-2SB	500 A	500x240x210 (mm)	Layout Click
KCT-T2550-2SB	KCT-T4550-2SB	KCT-T5550-2SB	550 A		
KCT-T2600-2SB	KCT-T4600-2SB	KCT-T5600-2SB	600 A		
KCT-T2650-2SB	KCT-T4650-2SB	KCT-T5650-2SB	650 A		
KCT-T2700-2SB	KCT-T4700-2SB	KCT-T5700-2SB	700 A		

Product Specifications(H, P, B Type)

★ **Circuit Diagram [3 Phase, 1 Stage (250, 450, 500 V~)]**

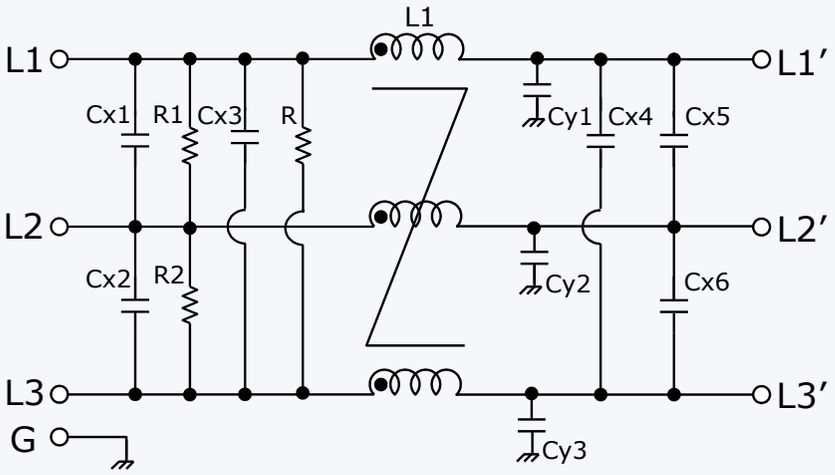

★ **Circuit Diagram [3 Phase, 2 Stage (250, 450, 500 V~)]**

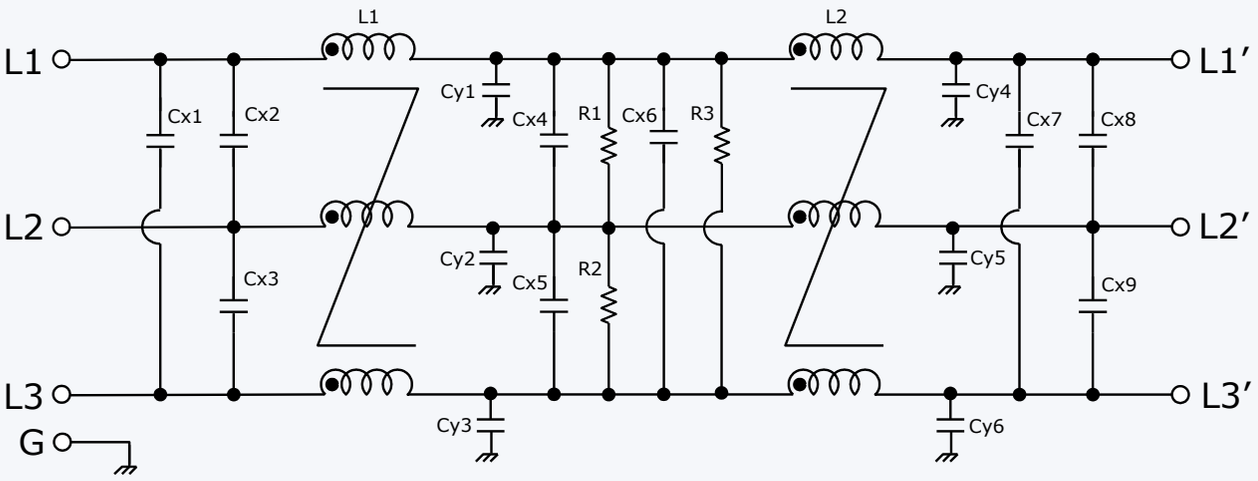

Nano Crystalline Core

Type	Core Dimensions(mm)			Case Dimension(mm)			Weight (g)	AL(μH)	
	OD	ID	H	OD	ID	H		10 kHz	100 kHz
KCT-N30	30	20	15	35	17.7	18.7	41	110	18
KCT-N40	40	25	20	44.7	21.6	24.6	104	120	27
KCT-N50	50	32	20	53.6	28.4	23.7	145	118	28
KCT-N65	65	50	25	68.4	46.8	28.6	215	88	19
KCT-N80	80	50	20	83.8	46.7	24.7	375	120	27
KCT-N90	90	60	20	95.4	54.7	24.7	395	98	28
KCT-N110	110	80	25	115.8	74.8	30.4	705	100	20
KCT-N140	140	100	25	143.8	96.1	30.7	1100	95	22

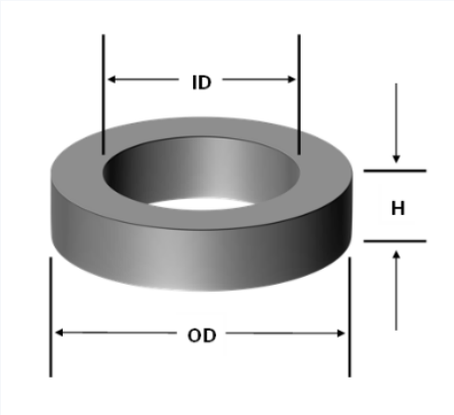

Test performance curves of typical samples

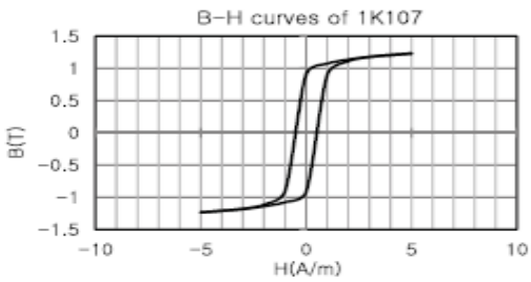

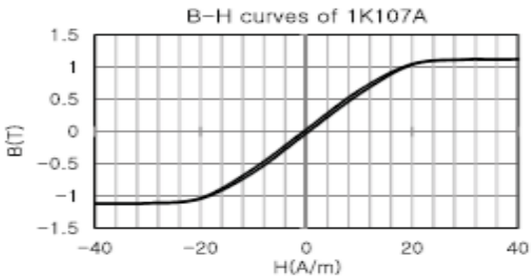

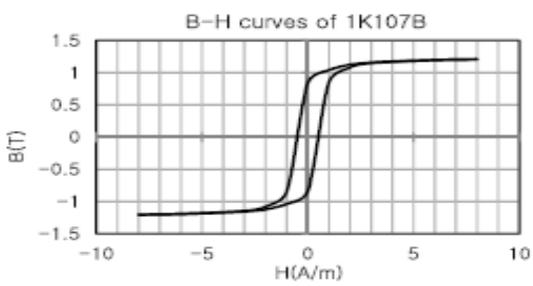

(주)케이코어텍
K-Core Technology Co., Ltd.

Nano Crystalline Core

Type	Core Dimensions(mm)			Case Dimension(mm)			AL(μH)		Hyperlink
	OD	ID	H	OD	ID	H	10 kHz	100 kHz	
KCT-N140B (A Type)	140	100	25	143.8	96.1	30.7	95	22	Layout Click
KCT-N110B (A Type)	110	80	25	115.8	74.8	30.4	100	20	Layout Click
KCT-N90B (B Type)	90	60	20	95.4	54.7	24.7	98	28	Layout Click
KCT-N80B (B Type)	80	50	20	83.8	46.7	24.7	120	27	Layout Click
KCT-N65B (C Type)	65	50	25	68.4	46.8	28.6	88	19	Layout Click

(주)케이코어텍
K-Core Technology Co., Ltd.

(주)케이코어텍
K-Core Technology Co., Ltd.

경기도 성남시 중원구 둔촌대로 449, 704호
704, 449 Dunchon-daero, Jungwon-gu, Seongnam-si,
Gyeonggi-do, Republic of Korea
Tel. : +82-31-731-3330 / Fax. : +82-31-731-3331
E-mail. : admin@k-coretec.co.kr